ATOMMS: the Active Temperature, Ozone and Moisture Microwave Spectrometer

Christopher Groppi[1], E. Robert Kursinski[1], Dale Ward[1], Michael Schein[1], Sarmad Al Banna[1], Willy Bertiger[2], Mark Miller[2], Herb Pickett[2]

1: University of Arizona 2:NASA Jet Propulsion Lab

ATOMMS represents a new class of active, airborne, limb-viewing spectrometer that is a cross between Global Positioning System (GPS) occultations (e.g. Kursinski et al., 1997) and NASA's Microwave Limb Sounder. ATOMMS will characterize atmospheric constituents by actively probing their cm and mm wavelength absorption lines. Two instrument packages are being constructed for NASA's WB-57F high altitude research aircraft, now equipped with precise WAVES gimbaled pointing systems. One aircraft will generate multiple tones near the 22 GHz water line and 183 GHz to 204 GHz absorption lines and transmit them across the Earth's limb through the atmosphere to receivers on a second aircraft. Flight paths of the two aircraft begin over the horizon, with the two aircraft flying at 65 kft altitude. This creates a rising occultation geometry as the aircraft fly towards each other. ATOMMS provides the sensitivity, resolution and accuracy needed to satisfy key monitoring needs for temperature, pressure, moisture and ozone. The 100 to 200 m ATOMMS vertical resolution will far surpass the 1 to 4 km vertical resolution of present state-of-the-art satellite radiometers opening a window into atmospheric scales previously inaccessible from space. Predicted precisions of individual ATOMMS temperature, pressure and moisture profiles are unprecedented at ~0.4 K, 0.1% and 1-3% respectively, extending from near the surface to the flight altitude of ~20 km. ATOMMS ozone profiles precise to 1-3% will extend from the upper troposphere well into the mesosphere. Other trace constituents such as water isotopes can be measured with performance similar to that of ozone. The ATOMMS experiment is a pathfinder experiment for eventual implementation on a constellation of satellites. Space observations from multiple satellites in precessing orbits will allow for global spatial coverage and increased altitude coverage. Our long term goal is a constellation of approximately a dozen small spacecraft making ATOMMS measurements that will provide dense, global coverage and complete cloud-penetration and diurnal sampling every orbit.

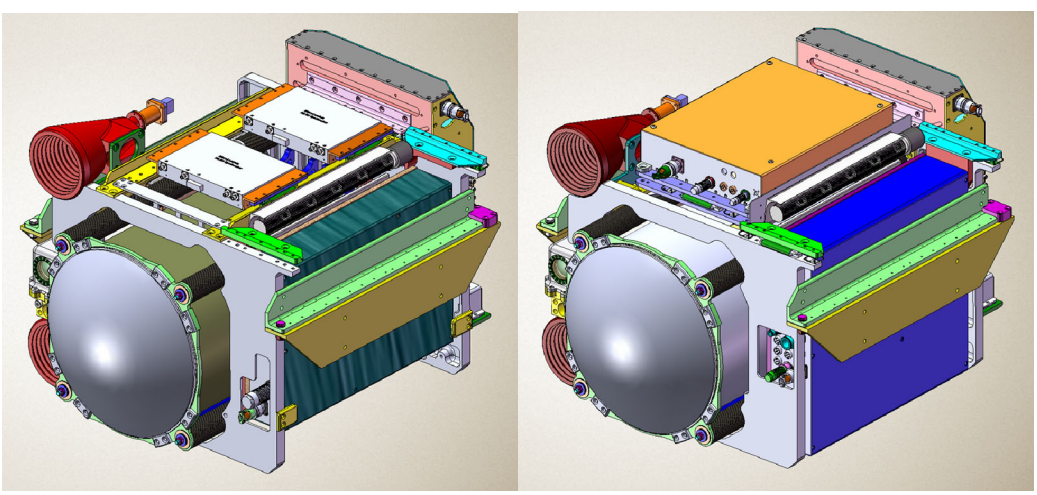

Complete solid models of the ATOMMS instrument packages. ATOMMS-A (l) is equipped with a 183 GHz transmitter and 22 GHz receiver. ATOMMS-B (r) is equipped with a 183 GHz receiver and 22 GHz transmitter.