Design, Fabrication and Characterization of Switched Oscillators at 200 and 500 MHz

D. V. Giri [(1)], M. Nyffeler [(2)] and M. C. Skipper [(3)]
(1) Pro-Tech, Alamo, CA 94507 and Dept. of ECE, Univ. of New Mexico, Albuquerque, NM 87131, Giri@DVGiri.com; http://www.dvgiri.com
(2) Chief, HPE Laboratory, armasuisse, CH-3700 Spiez, Switzerland
(3) ASR Corporation, Albuquerque, NM 87120

The MATRIX topology has been described in described in [C.E. Baum, "*Switched Oscillators*," Circuit and Electromagnetic System Design Note 45, 10 September 2000 and J.W. Burger, C.E. Baum, W.D. Prather, R. Torres, D.V. Giri, M.D. Abdalla, M.C. Skipper, B.C. Cockreham, J. Demarest, K. Lee and D. McLemore, "*Modular Low Frequency High Power Microwave Generator*," presented at AMEREM 2002, Naval Academy, Annapolis, MD]. We have investigated using this fundamental MATRIX configuration to generate four separate oscillator modules; 200 MHz, 300 MHz, 400 MHz and 500 MHz. The MATRIX system is designed as a fairly optimized configuration in several regards and can be used as a starting point for the present investigations. One of the primary constraints is that the electric fields must be the highest at the switch and must gradually decline from the switch section to the coaxial section. This is to ensure the correct position for switch closure. The ratio of electric fields in the coaxial section to the electric fields in the switch section is a fine balance between minimizing the length of the radial transmission line (RTL) and maximizing the probability that switching events will occur at the switch. The mechanical layouts of the four oscillators are shown in Figure 1.

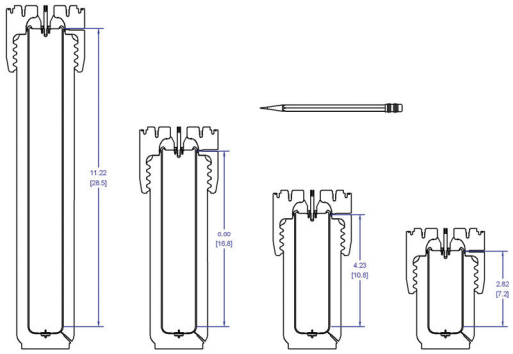

Figure 1. Mechanical layout of switched oscillators at 200, 300 400 and 500 MHz.

In this presentation, we will describe the following aspects

- Generate preliminary oscillator layouts for four different frequencies.
- Perform PSpice simulations of chosen layouts.
- Fabricate two oscillators at 200 MHz and 500 MHz.
- Test these two oscillators in a dummy load consisting of a 100 Ohm transmission line.